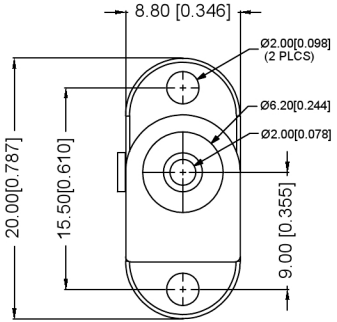

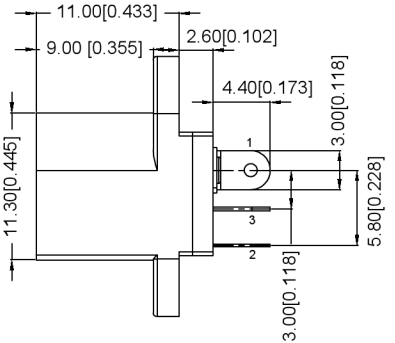

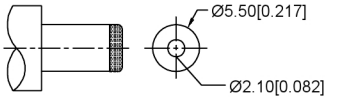

MATING PLUG
Jack Insertion Depth: 9.0 mm

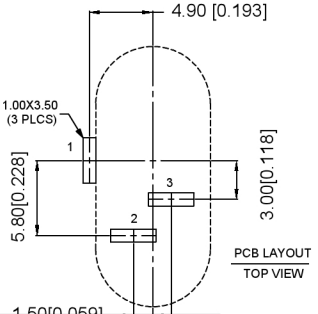

PCB LAYOUT
TOP VIEW

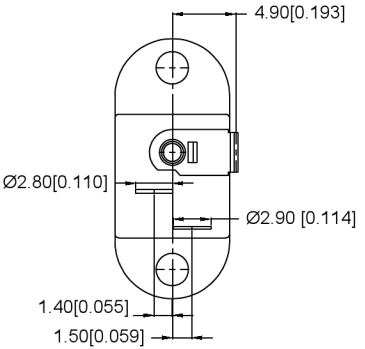

SCHEMATIC	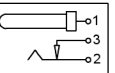
Model	DC-017
Center Pin	Ø2.0 mm
	Ø2.5 mm

	MATERIAL	PLATING
center pin	Brass	tin
terminal 1	Brass	tin
terminal 2	Sus	tin
terminal 3	Brass	tin
plastic	Pbt	

广东星坤科技股份有限公司
生效日期
文件工程章

MARK	DESCRIPTION	DATE	REVISED	APPROVED

REVISIONS

ANGLAR	±5°
X.X	±0.2mm
X.XX	±0.1mm
X.XXX	±0.05mm

UNSPECIFIED TOLERANCES

DSND		DATE		SCALE: N/A	MODEL TYPE: DC POWER JACK
DWN		DATE		VIEW:	PART NO.:
CHKD		DATE		UNIT: mm/in	
APPD		DATE		SIZE: A4	DWG NO.: DC-017-2.5A-2.0

XKB INDUSTRIAL PRECISION CO.,LIMITED

WEIGHT	SHEET	REVISION
1.0g	1/1	A0

www.xk-dg.cn www.helloxkb.com www.helloxkb.cn